Type	Value
Max Weight	9.7 kg / 21.4 lb
IP Class	IP55/66
Nema Class	Type 12/4X

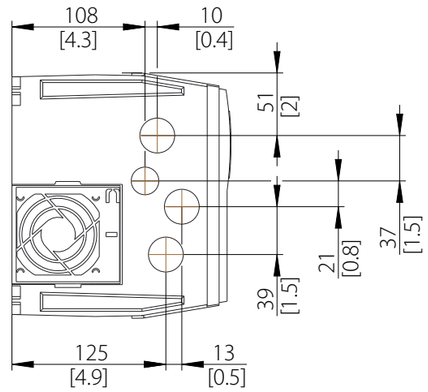

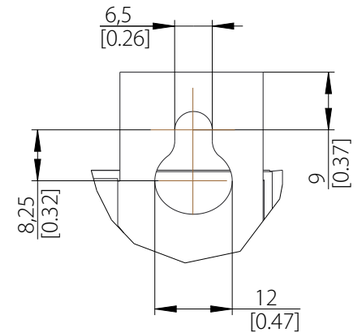

2x DETAIL A
SCALE 1:1

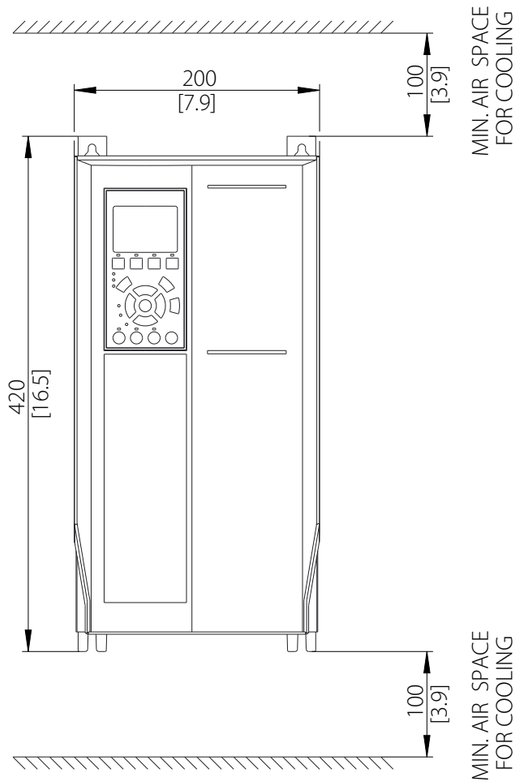

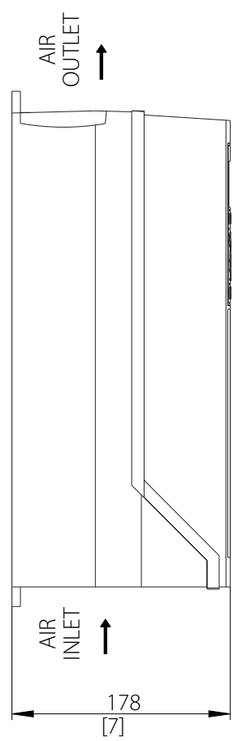

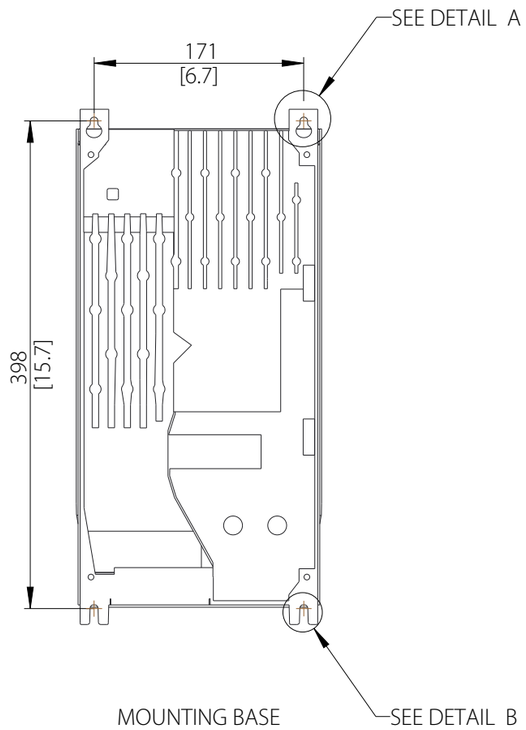

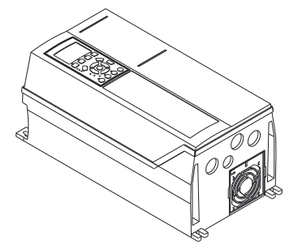

SCALE 1:10

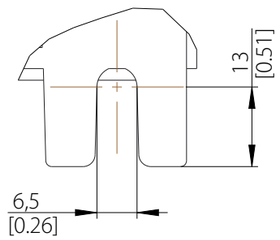

2x DETAIL B
SCALE 1:1

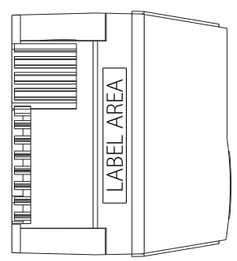

THIS DRAWING SHOWS THE MOST COMMON VERSION OF THIS PRODUCT VARIANT.
SMALL DIFFERENCES MAY OCCUR DEPENDING ON THE FINAL PRODUCT CONFIGURATION.

CENTER OF GRAVITY:
FOR REFERENCE ONLY, THE PRODUCT CONFIGURATION MAY INFLUENCE THE CG IN ALL THREE AXES.

UNLESS OTHERWISE SPECIFIED THE TOLERANCE IS ±1MM [0.4 INCH]. ALL DIMENSIONS ARE IN MILLIMETERS [INCH]	FIRST ANGLE PROJECTION	SCALE 1:5	DRAWING SIZE A3	MATERIAL	-
				FINISH	-
CHANGED			Danfoss	DESCRIPTION: ENCLOSURE A4	
DESIGNED	Danfoss				
CHECKED	KISHORE	12-10-2020			
PROPERTY OF DANFOSS A/S NORDBORG, DENMARK. TWO OR THREE DIMENSIONAL REPRODUCTION OF CONTENTS TO BE AUTHORIZED BY DANFOSS A/S.				DRAWING NUMBER: MCAD-FC-A4-IP55-66	REV 001
				MODEL: MCAD-FC-A4-IP55-66	SHEET 1 OF 1