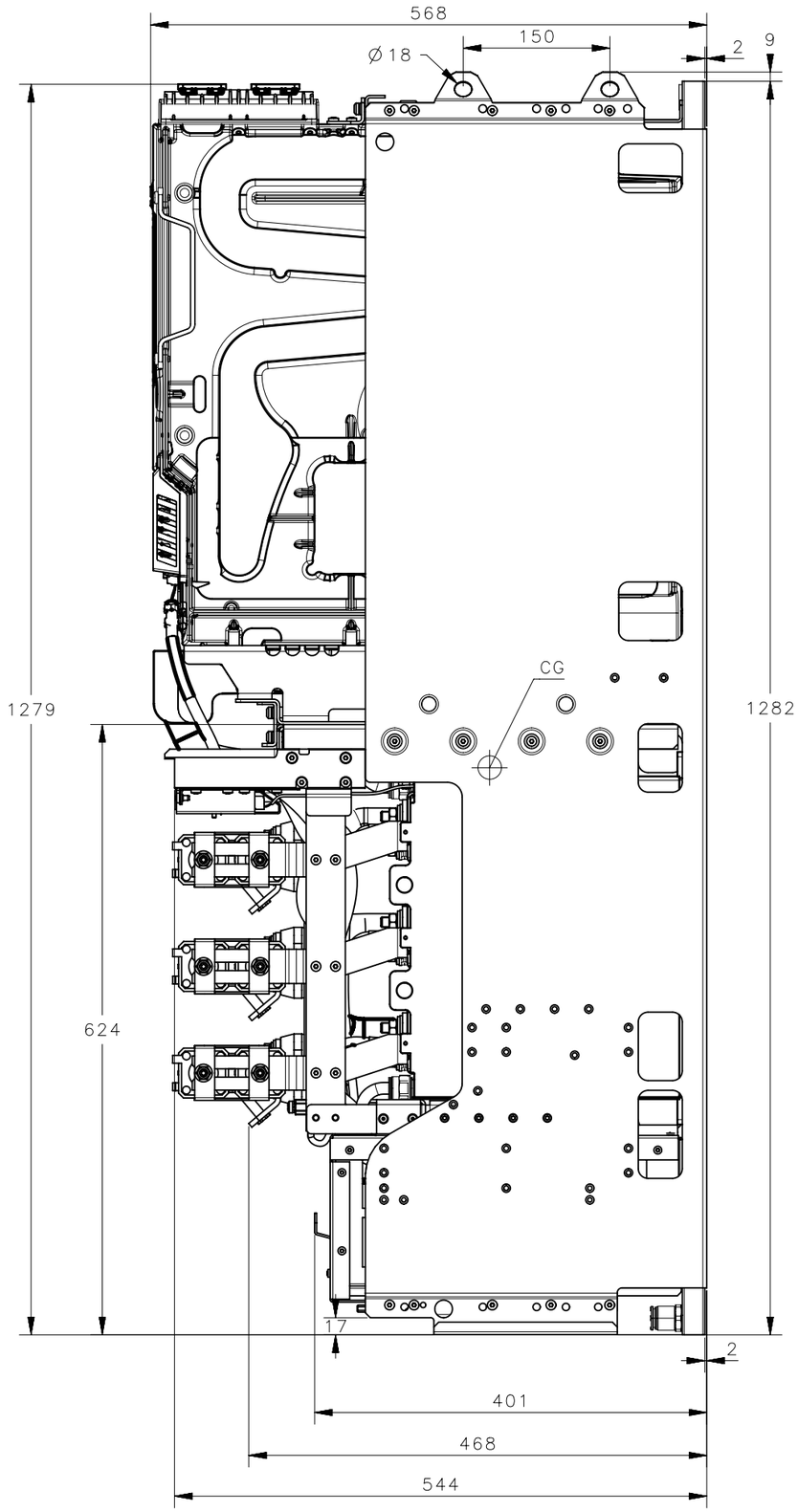

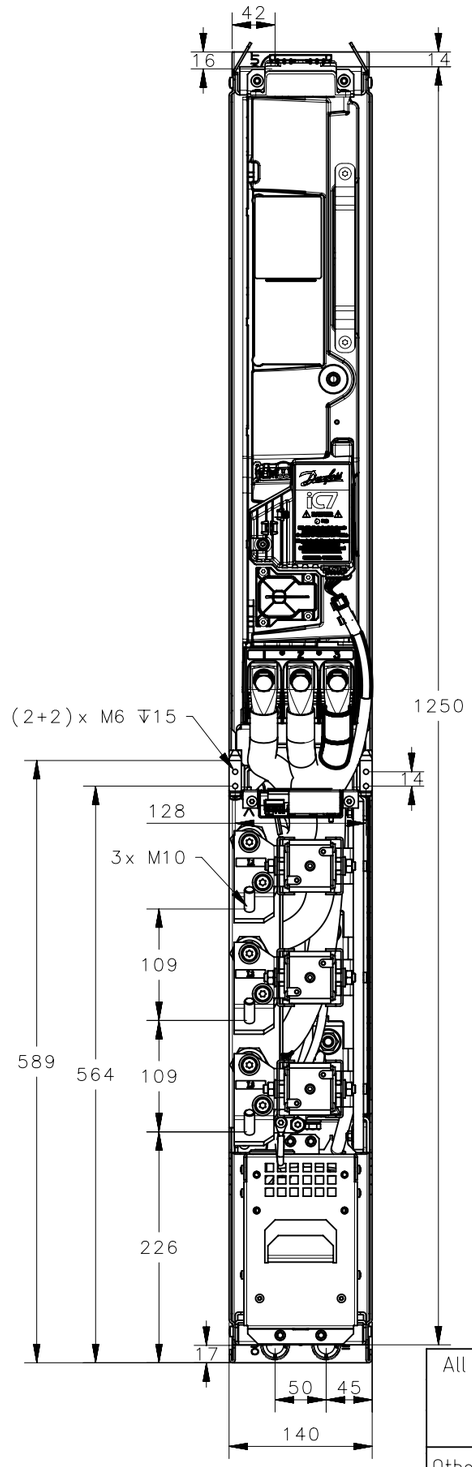

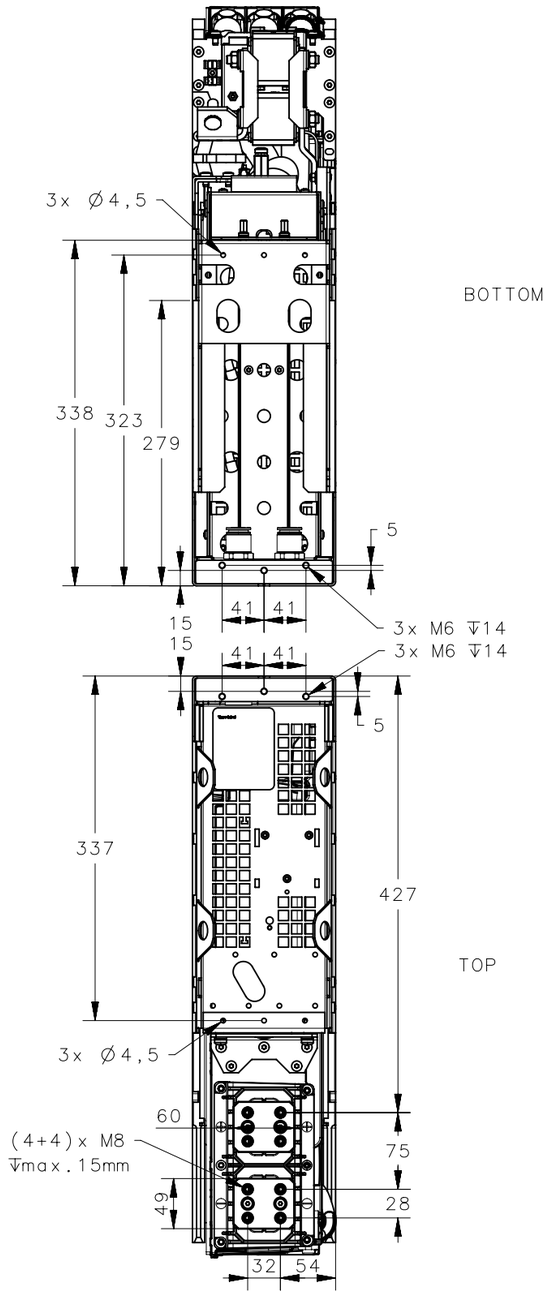

All dimensions are in Millimeters	Projection	Size	A3	
		Thickness	-	Material:
		Mass	138 Kg	Finish: -
Other dimensions acc. to 3D-model				Description / Name
Replace	-			MCAD-iC7-60-AR10L-IP00-AEZ1
Designer	Danfoss 14-Sep-2022			
Modifier	-			

Confidential: Property of Danfoss and its subsidiaries. Not to be copied, handed over to or used by third party. Two- or three dimensional reproduction of content to be authorized by Danfoss Drives A/S

Item Number	DPD02238
REV	A
Sheet	1 of 1